KUDUX®
STAGE TECHNOLOGY

MAGIC EYE 7

7 EYES LED

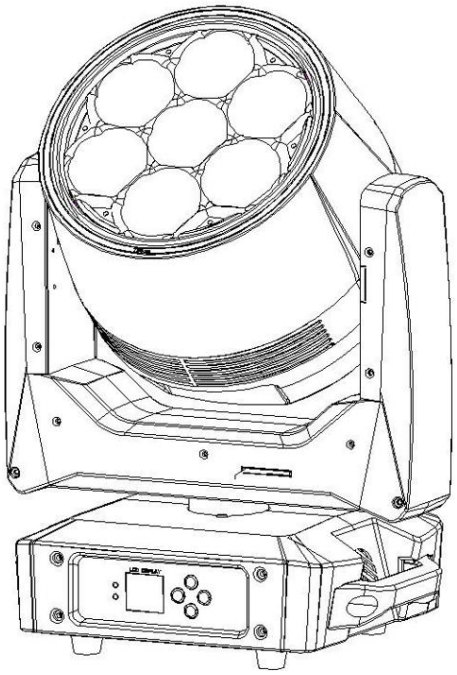

! Please read the manual before installing and using this lighting

Keep it for future reference

Remark:

Errors and omissions for every information given in this manual except.

All information is subject to change without prior notice.

CE

Manual instruction

V1.1

Contents:

1. Precautions and Installation Precautions and Installation 3
2. Control Panel 4
2.1. Key instructions 5
2.2. Settings 7
3. Channel table 8
3.1. Channel Table (23CH) 8
3.2. Channel Table (33CH) : 9
3.3. Channel Table (49CH) : 11
3.4. Channel table (123CH) : 13
4. Error message 27
4.1. The Pan and Titl reset errors 27
4.2. The X-axis and Titl encoders are incorrect 27
4.3. Amplify reset errors 27
4.4. Rotation reset error 28
4.5. Temperature error 28
5. Common Faults 28
5.1. The lamp beads don't light up, the lamp doesn't work, the fan doesn't rotate 28
5.2. The lamp does not accept control from the console after a normal reset 28
5.3. The lamp does not start 28
5.4. When in operation, the Pan or Titl movement of the lamp is abnormal 29
5.5. Some channel is out of control 29
6. Equipment cleaning 29
7. CONTACT: 29

1. Precautions and Installation Precautions and Installation

1.1. Statements

Thank you for choosing our products! This product comes out of the factory with perfect performance and intact packaging. For your safe and effective use of this product, please read this instruction manual carefully and completely before you use this product. This manual contains important information for installation and use. Please install and operate in accordance with the requirements of the manual. Also, please keep this manual properly for use at any time.

Technical changes to this manual will not be notified separately.

1.2. Maintenance and Servicing

- This luminaire is for professional use only.
- If the external flexible cable or wire of this luminaire is damaged, it should be replaced with a dedicated wire or wire provided by the manufacturer or its service agent.
- The light source included in this luminaire may only be replaced by the manufacturer or its service agent or a similar qualified person.
- Always connect the product to a protected circuit (circuit breaker or fuse). Make sure the product has proper electrical grounding to avoid the risk of electric shock or fire.
- To avoid unnecessary wear and tear and extend its service life, power should be completely cut off by circuit breaker or unplug when not in use.
- The housing may generate heat when the product is in operation. This product should be installed in a well- ventilated location.
- When moving the product from an extreme temperature environment (for example, from a cold truck to a warm and damp auditorium), the internal electronic components of the product

The parts may condense. To avoid malfunctioning, allow the product to fully adapt to the surrounding environment before powering on.

- It is well known that flashes can trigger epileptic seizures. Users must comply with local notification laws regarding the use of flashlights.

1.3. Product Notes

- Disconnect the power supply before cleaning the product or replacing the fuse.
- When not in use, replace and secure all power, data, USB, or other port shields to achieve IP protection level.
- Use a safety rope when installing this product above your head.
- Connect this product to a grounded and protected circuit.
- Check the light source when the product is turned on.
- Do not place any flammable material within 20 cm of this product when operating or powering on.
- Do not operate this product if there is damage to the housing, lenses or cables.
- This product can only be moved using a handle or a hoist/mounting bracket.
- To avoid unnecessary wear and tear and extend its service life, power should be completely cut off by circuit breaker or unplug when not in use.
- In case of serious operational problems, use should be stopped immediately

1.4. Product Descriptions

- Voltage: AC100-240V 50/60HZ
- Power: 560W
- Light source: 7*60W RGBW LED, Magic Eye: 12*9*0.2W+12*0.2W, auxiliary light :252*0.2W, light coil: 48*0.2W
- Beam Angle: 3.8°- 41°
- Spot Angle: 6.3°- 63°
- Move: XY16bit; X-axis 540°; Y-axis 270°
- Control mode: DMX512, self-propelled, voice-controlled, master-slave, with RDM function.
- Channels: 23CH.33CH.49CH.123CH.

- Dimming: 0 to 100% linear dimming
- Features: Full coverage of beam, color, effects and auxiliary light; Linear CTO stepless color temperature; RGB Phantom eye effect; 360° panoramic rendering
- Operating ambient temperature: 0° to 45°
- Stroboscopic frequency: 1 to 30HZ
- Appearance: Metallic, black
- Connection method: DMX512 input/output/Power input/output.
- IP rating: IP20
- Size :396.5 *275 * 497.5MM (15.6" x 10.83" x 19.6 ")
- Weight: 14.2KG (31.3lbs)

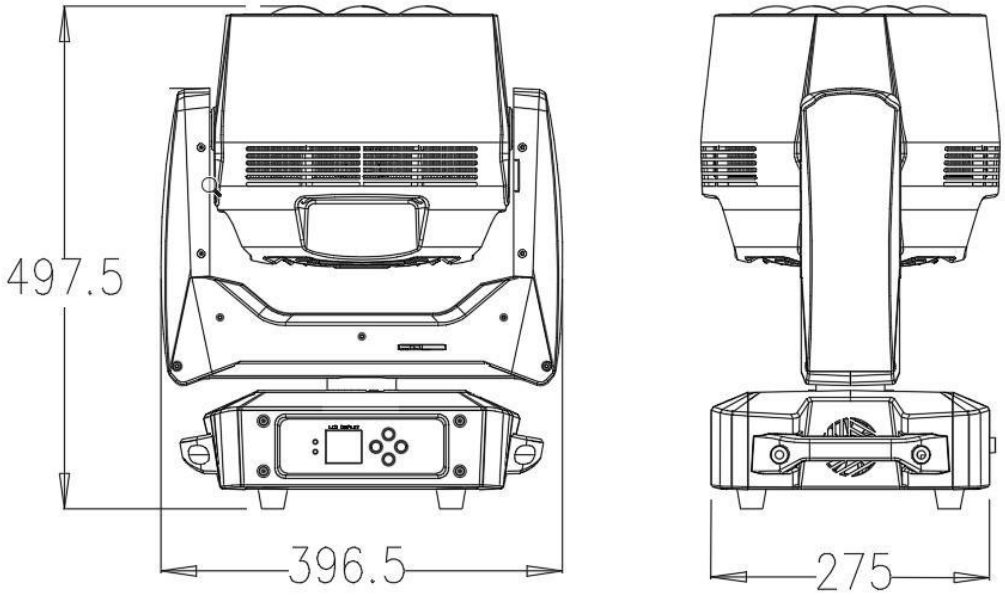

Figure 1 Schematic diagram of lamp size

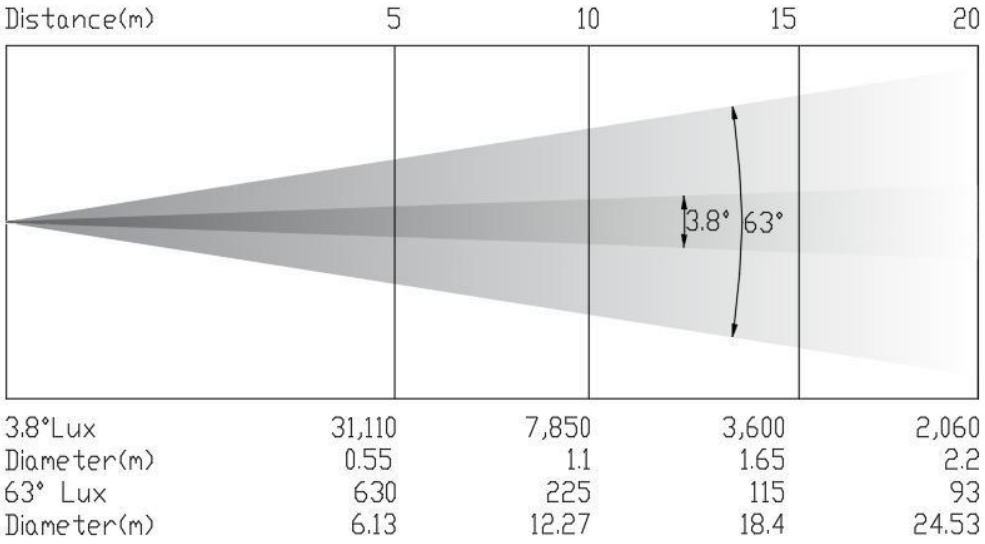

Figure 2 Product illuminance diagram

2. Control Panel

2.1. Key instructions

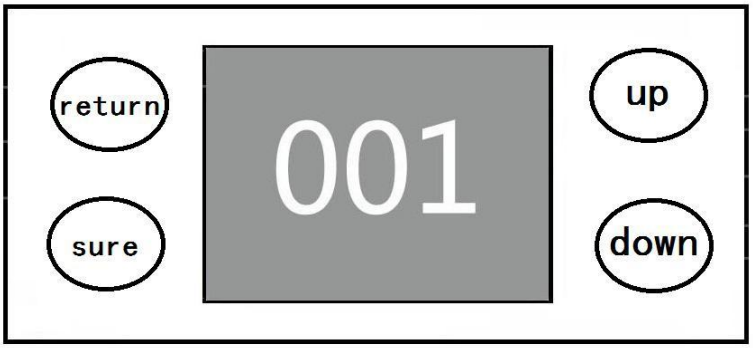

Figure 3 Schematic diagram of panel keys

The following describes how to use the keys:

1. On the main interface, press the up and down keys to change the address code, and press the OK key and the screen flashes once to save.
2. If you are not currently on the main interface, press the "Back" key (once or multiple times) to return to the main interface
3. Under the main interface, press the back key to enter the Settings interface
4. In Settings, press Up or Down to select Menu.
5 Press the "OK" key to enter the editing mode
6 Press Up or Down to modify the menu
7 Press "OK" to exit editing

2.2. Settings

Options	Instructions		
DMX Settings	DMX Address	1-485	1-485 address code selection
	Channel Mode	23CH	23-channel mode
		33CH	33 Channel Mode
		49CH	49 Channel mode
		123CH	123 Channel mode
	N0 DMX status	Blackout	DMX signal clearance
		Hold	DMX signal hold
	DMX Monitor	Channel1	Check console data
		Channel2	
		...	
		...	
Fixture Test	Auto Mode	OFF	DMX control
		Auto	Activate autopilot mode
		Soud	Activate the voice control mode
	Manual testing	Pan	
		Pan Fine	
		...	
		...	
	Reset	OFF	
		head	
		XY	
		ALL	
Fixture Settings	Horizontal reverse	no	The X-axis is closed in reverse
		is	The X-axis opens in reverse
	Vertical reverse	no	The Y-axis is closed in reverse
		is	The Y-axis opens in reverse
	XY encoder	open	
		close	
	Dimming curve	Square	Square
		Linear	Straight line
		S Curve	Sine
		Lnv SQ	Inverse square
	Dimming mode	Mode 1	
		Mode 4	
		Mode 3	
		Mode 2	
	Restore factory inspection Settings	Confirm	
		Cancel	
Display Settings	Show Reverse	Yes/No	Set screen reverse
	Backlight	1-10	Adjust the screen brightness from dark to bright

	brightness		
	Temperature units	°C	"Celsius"
		°F	Degrees Fahrenheit
	Language	Chinese/English	Chinese-english switch
	Lock screen	Yes/No	Lock screen switch
Fixture Information	Software version	Show the software version and the version of each board	
	Temperature	LED1	Independent LED temperature detection
		LED2	
		...	
	Hall state	Pan Hall	When magnetism is detected, it is 0; otherwise, it is 1
		X-axis encoding	
		...	
	Error logging		View Error Records
	Device Time		Device usage time
	LED time		LED usage time
	Permission duration		9999 unlimited; Other values have time limits
Factory	Motor	X-axis	The reset position of motors such as the X-axis and Y-axis can be adjusted to compensate for hardware installation errors. The adjustment range is -128 to +127, and +0 indicates no adjustment.
		Y-axis	
		Zoom in	
		Rotation	
	Color calibration	Clear	Press the OK key to clear the color calibration
		Red 1	0-255 Adjust single color deviation from dark to light. The adjustment range is recommended to be controlled between 220-255
		Red 2	
		....	

3. Channel table

3.1. Channel Table (23CH)

Channels	Features	Channel values	Effects
1	X-axis	000-255	Rotate 540°
2	X-axis fine-tuning	000-255	16bit
3	Y-axis	000-255	Rotate 270°
4	Fine-tuning the Y-axis	000-255	16bit
5	Xy-axis velocity	000-255	0-100%, from fast to slow
6	Enlarge	000-255	0-100%, from small to large
7	Spin	000-127 128-190 191-193	Rotation Angle adjustment Rotate forward, from fast to slow Stop

		194-255	Rotate in the opposite direction, from slow to fast
8	Function	000-009 010-255	no View (Control Settings
9	Dimming	000-255	0-100% from dark to bright
10	Stroboscopic	000-019 020-255	Light valve closed View (Stroboscopic Settings)
11	red	000-255	0-100% from dark to light
12	green	000-255	0-100% from dark to light
13	blue	000-255	0-100% from dark to light
14	white	000-255	0-100% from dark to light
15	Magic Eye Red	000-255	0-100% from dark to light
16	Magic Eye Green	000-255	0-100% from dark to light
17	Magic Eye Blue	000-255	0-100% from dark to light
18	Accent red	000-255	0-100% from dark to bright
19	Complementary green	000-255	0-100% from dark to bright
20	Accent blue	000-255	0-100% from dark to bright
21	Red light ring	000-255	0-100% from dark to bright
22	Light ring green	000-255	0-100% from dark to bright
23	Blue light ring	000-255	0-100% from dark to bright

3.2. Channel Table (33CH) :

Channels	Features	Channel values	Effects
1	X-axis	000-255	Rotate 540°
2	X-axis fine-tuning	000-255	16bit
3	Y-axis	000-255	Rotate 270°
4	Fine-tuning the Y-axis	000-255	16bit
5	Xy-axis velocity	000-255	0-100%, from fast to slow
6	Enlarge	000-255	0-100%, from small to large
7	Spin	000-127 128-190 191-193 194-255	Rotation Angle adjustment Rotate forward, from fast to slow Stop Rotate in the opposite direction, from slow to fast
8	Function	000-009 010-255	no View (Control Settings)
9	Dimming	000-255	0-100% from dark to bright
10	Stroboscopic	000-019 020-255	Light valve closed View (Stroboscopic Settings)

11	Effect	000-015 016-051 052-255	Ineffective For static graphics, there is an effect for every two values Dynamic effects are every 3 values View (LED Macro Feature) Automatically change color when no color is selected
12	Effect Speed	000-255 000-127 128 129-255	Use as offset in static graphics Dynamic effect, forward from fast to slow Stop Dynamic effects, reverse from slow to fast
13	Magic Eye Effect	000 001-255	Ineffective One effect per number, automatic color change when no color is selected
14	Magic Eye Center effect	000 001-049 050-255	Ineffective Color selection, one color per number View (Effect 1) one effect for every 3 values
15	Magic Eye effect Speed	000-127 128 129-255	Positive, from fast to slow Stop Reverse, from slow to fast
16	Fill light effect	000 001-255	Ineffective One effect per number, automatic color change when no color is selected
17	Fill light effect speed	000-127 128 129-255	Forward, from fast to slow Stop Reverse, from slow to fast
18	Light ring effect	000 001-227 228-255	Ineffective View (Effect 2) one effect for every 2 values Automatically change colors when no color is selected View (Effect 2) One effect for every 4 values, fix the color
19	Light coil effect speed	000-127 128 129-255	Positive, from fast to slow Stop Reverse, from slow to fast
20	red	000-255	0-100% from dark to light
21	green	000-255	0-100% from dark to light
22	blue	000-255	0-100% from dark to light
23	white	000-255	0-100% from dark to light
24	CTC	000 001-255	no From 10,000K to 2500K

25	Magic Eye Red	000-255	0-100% from dark to light
26	Magic Eye Green	000-255	0-100% from dark to light
27	Magic Eye Blue	000-255	0-100% from dark to light
28	Accent red	000-255	0-100% from dark to bright
29	Complementary green	000-255	0-100% from dark to bright
30	Accent blue	000-255	0-100% from dark to bright
31	Red light ring	000-255	0-100% from dark to bright
32	Light ring green	000-255	0-100% from dark to bright
33	Blue light ring	000-255	0-100% from dark to bright

3.3. Channel Table (49CH) :

Channels	Features	Channel values	Effects
1	X-axis	000-255	Rotate 540°
2	X-axis fine-tuning	000-255	16bit
3	Y-axis	000-255	Rotate 270°
4	Fine-tuning the Y-axis	000-255	16bit
5	Xy-axis velocity	000-255	0-100%, from fast to slow
6	Enlarge	000-255	0-100%, from small to large
7	Spin	000-127 128-190 191-193 194-255	Rotation Angle adjustment Rotate forward, from fast to slow Stop Rotate in the opposite direction, from slow to fast
8	Function	000-009 010-255	no View (Control Settings)
9	Total dimming	000-255	0-100% from dark to bright
10	Dimming	000-255	0-100% from dark to bright
11	Stroboscopic	000-019 020-255	Light valve closed View (Stroboscopic Settings)
12	Magic Eye Dimming	000-255	0-100% from dark to bright
13	Magic Eye stroboscopic	000-019 020-255	Light valve closed View (Stroboscopic Settings)
14	Auxiliary dimming	000-255	0-100% from dark to bright
15	Backlight stroboscopic	000-019 020-255	Light valve closed View (Stroboscopic Settings)
16	Light coil dimming	000-255	0-100% from dark to bright
17	The light coil flickers	000-019 020-255	Light valve closed View (Stroboscopic Settings)
18	red	000-255	0-100%, from dark to bright

19	green	000-255	0-100% from dark to light
20	blue	000-255	0-100% from dark to light
21	white	000-255	0-100% from dark to light
22	CTC	000 001-255	no From 10,000K to 2500K
23	Color temperature red-green adjustment	000-127 128 129-255	Green increases linearly No correction Red linear increase
24	Color macros	000 001-255	no View (Color Macro Settings)
25	Effects	000-015 016-051 052-255	Ineffective Static graphics: One effect for every 2 values Dynamic effects are every 3 values View (LED Macro Feature) Automatically change color when no color is selected
26	Effect Speed	000-255 000-127 128 129-255	Use as offset in static graphics Dynamic effect, forward from fast to slow Stop Dynamic effects, reverse from slow to fast
27	Effect delay	000-255	0-100%, from fast to slow
28	Magic Eye Red	000-255	0-100% from dark to light
29	Magic Eye Green	000-255	0-100%, from dark to bright
30	Magic Eye Blue	000-255	0-100% from dark to light
31	Magic Eye Color Macro	000 001-255	no View (Color Macro Settings)
32	Magic Eye effect	000 001-255	Ineffective One effect per number, automatic color change when no color is selected
33	Magic Eye Center effect	000 001-049 050-255	Ineffective Color selection: One color for each value View (Effect 1) one effect for every 3 values
34	Magic Eye effect Speed	000-127 128 129-255	Forward, from fast to slow Stop Reverse, from slow to fast
35	The Magic Eye effect delays	000-255	0-100%, from fast to slow
36	Light red	000-255	0-100% from dark to bright
37	Complementary green	000-255	0-100% from dark to bright
38	Accent blue	000-255	0-100% from dark to bright

39	Fill color macro	000 001-255	no View (Color Macro Settings)
40	Fill light effects	000 001-255	Ineffective One effect per number, automatic color change when no color is selected
41	Fill light effect speed	000-127 128 129-255	Forward, from fast to slow Stop Reverse, from slow to fast
42	Fill light effect delay	000-255	0-100%, from fast to slow
43	Red light ring	000-255	0-100% from dark to bright
44	Light ring green	000-255	0-100% from dark to bright
45	Blue light ring	000-255	0-100% from dark to bright
46	Light ring color macro	000 001-255	no View (Color Macro Settings)
47	Light coil effect	000 001-227 228-255	Ineffective View (Effect 2) one effect for every 2 values Automatically change colors when no color is selected View (Effect 2) One effect for every 4 values, fix the color
48	Light coil effect speed	000-127 128 129-255	Forward, from fast to slow Stop Reverse, from slow to fast
49	Light coil effect delay	000-255	0-100%, from fast to slow

3.4. Channel table (123CH) :

Channels	Function	Channel values	Effects
1	X-axis	000-255	Rotate 540°
2	X-axis fine-tuning	000-255	16bit
3	Y-axis	000-255	Rotate 270°
4	Fine-tuning the Y-axis	000-255	16bit
5	Xy-axis velocity	000-255	0-100%, from fast to slow
6	Enlarge	000-255	0-100%, from small to large
7	Enlarge and fine-tune	000-255	16bit
8	Spin	000-127 128-190	Rotation Angle adjustment Rotate forward, from fast to slow

		191-193 194-255	Stop Rotate in the opposite direction, from slow to fast
9	Spin fine-tuning	000-255	16bit
10	Features	000-009 010-255	no View (Control Settings)
11	Total dimming	000-255	0-100% from dark to bright
12	Dimming	000-255	0-100% from dark to bright
13	Dimming fine-tuning	000-255	16bit
14	Stroboscopic	000-019 020-255	Light valve closed View (Stroboscopic Settings)
15	Magic Eye Dimming	000-255	0-100% from dark to bright
16	Magic Eye stroboscopic	000-019 020-255	Light valve closed View (Stroboscopic Settings)
17	Auxiliary dimming	000-255	0-100% from dark to bright
18	Backlight stroboscopic	000-019 020-255	Light valve closed View (Stroboscopic Settings)
19	Light coil dimming	000-255	0-100% from dark to bright
20	The light coil flickers	000-019 020-255	Light valve closed View (Stroboscopic Settings)
21	red	000-255	0-100% from dark to light
22	Red fine-tuning	000-255	16bit
23	green	000-255	0-100% from dark to light
24	Green Fine-tuning	000-255	16bit
25	blue	000-255	0-100% from dark to light
26	Blue Fine-tuning	000-255	16bit
27	white	000-255	0-100%, from dark to bright
28	White fine-tuning	000-255	16bit
29	CTC	000 001-255	no From 10,000K to 2500K
30	Color temperature red-green adjustment	000-127 128 129-255	Green increases linearly No correction Red linear increase
31	Color macros	000 001-255	no View (Color Macro Settings)
32	Effects	000-015 016-051 052-255	Ineffective Static graphics: One effect for every 2 values Dynamic effects are created for every three values View (LED Macro Feature) Automatically change color when no color is selected

33	Effect Speed	000-255 000-127 128 129-255	Use as offset in static graphics Dynamic effect, forward from fast to slow Stop Dynamic effects, reverse from slow to fast
34	Effect delay	000-255	0-100%, from fast to slow
35	Magic Eye Red	000-255	0-100% from dark to light
36	Magic Eye Green	000-255	0-100% from dark to light
37	Magic Eye Blue	000-255	0-100% from dark to light
38	Magic Eye Color Macro	000 001-255	no View (Color Macro Settings)
39	Magic Eye effect	000 001-255	Ineffective One effect per number, automatic color change when no color is selected
40	Magic Eye Center effect	000 001-049 050-255	Ineffective Color selection, one color per number View (Effect 1) one effect for every 3 values
41	Magic Eye effect Speed	000-127 128 129-255	Forward, from fast to slow Stop Reverse, from slow to fast
42	The Magic Eye effect delays	000-255	0-100%, from fast to slow
43	Light red	000-255	0-100%, from dark to bright
44	Complementary green	000-255	0-100% from dark to bright
45	Accent blue	000-255	0-100% from dark to bright
46	Fill color macro	000 001-255	no View (Color Macro Settings)
47	Fill light effects	000 001-255	Ineffective One effect per number, automatic color change when no color is selected
48	Fill light effect speed	000-127 128 129-255	Forward, from fast to slow Stop Reverse, from slow to fast
49	Fill light effect delay	000-255	0-100%, from fast to slow
50	Red light ring	000-255	0-100% from dark to bright
51	Light ring green	000-255	0-100% from dark to bright
52	Blue light ring	000-255	0-100% from dark to bright
53	Light ring color macro	000 001-255	no View (Color Macro Settings)
54	Light coil effect	000 001-227	Ineffective View (Effect 2) one effect for every 2 values

		228-255	Automatically change colors when no color is selected View (Effect 2) One effect for every 4 values, fix the color
55	Light coil effect speed	000-127 128 129-255	Positive, from fast to slow Stop Reverse, from slow to fast
56	Light coil effect delay	000-255	0-100%, from fast to slow
57	Red 1	000-255	0-100% from dark to light
58	Green 1	000-255	0-100% from dark to light
59	Blue 1	000-255	0-100% from dark to light
60	White 1	000-255	0-100% from dark to light
61	Red 2	000-255	0-100% from dark to light
62	Green 2	000-255	0-100%, from dark to bright
63	Blue 2	000-255	0-100% from dark to light
64	White 2	000-255	0-100% from dark to light
65	Red 3	000-255	0-100% from dark to light
66	Green 3	000-255	0-100% from dark to light
67	Blue 3	000-255	0-100% from dark to light
68	White 3	000-255	0-100% from dark to light
69	Red 4	000-255	0-100% from dark to light
70	Green 4	000-255	0-100%, from dark to bright
71	Blue 4	000-255	0-100% from dark to light
72	White 4	000-255	0-100% from dark to light
73	Red 5	000-255	0-100% from dark to light
74	Green 5	000-255	0-100% from dark to light
75	Blue 5	000-255	0-100% from dark to light
76	White 5	000-255	0-100% from dark to light
77	Red 6	000-255	0-100% from dark to light
78	Green 6	000-255	0-100%, from dark to bright
79	Blue 6	000-255	0-100% from dark to light
80	White 6	000-255	0-100% from dark to light
81	Red 7	000-255	0-100% from dark to light
82	Green 7	000-255	0-100% from dark to light
83	Blue 7	000-255	0-100% from dark to light
84	White 7	000-255	0-100% from dark to light
85	Magic Eye Red 1	000-255	0-100% from dark to light
86	Magic Eye Green 1	000-255	0-100%, from dark to bright
87	Magic Eye Blue 1	000-255	0-100% from dark to light
88	Magic Eye Red 2	000-255	0-100% from dark to light
89	Magic Eye Green 2	000-255	0-100% from dark to light
90	Magic Eye Blue 2	000-255	0-100% from dark to light

91	Magic Eye Red 3	000-255	0-100% from dark to light
92	Magic Eye Green 3	000-255	0-100% from dark to light
93	Magic Eye Blue 3	000-255	0-100% from dark to light
94	Magic Eye Red 4	000-255	0-100%, from dark to bright
95	Magic Eye Green 4	000-255	0-100% from dark to light
96	Magic Eye Blue 4	000-255	0-100% from dark to light
97	Magic Eye Red 5	000-255	0-100% from dark to light
98	Magic Eye Green 5	000-255	0-100% from dark to light
99	Magic Eye Blue 5	000-255	0-100% from dark to light
100	Magic Eye Red 6	000-255	0-100% from dark to light
101	Magic Eye Green 6	000-255	0-100% from dark to light
102	Magic Eye Blue 6	000-255	0-100%, from dark to bright
103	Magic Eye Red 7	000-255	0-100% from dark to light
104	Magic Eye Green 7	000-255	0-100% from dark to light
105	Magic Eye Blue 7	000-255	0-100% from dark to light
106	Magic Eye Red 8	000-255	0-100% from dark to light
107	Magic Eye Green 8	000-255	0-100% from dark to light
108	Magic Eye Blue 8	000-255	0-100% from dark to light
109	Magic Eye Red 9	000-255	0-100% from dark to light
110	Magic Eye Green 9	000-255	0-100%, from dark to bright
111	Magic Eye Blue 9	000-255	0-100% from dark to light
112	Magic Eye Red 10	000-255	0-100% from dark to light
113	Magic Eye Green 10	000-255	0-100% from dark to light
114	Magic Eye Blue 10	000-255	0-100% from dark to light
115	Magic Eye Red 11	000-255	0-100% from dark to light
116	Magic Eye Green 11	000-255	0-100% from dark to light
117	Magic Eye Blue 11	000-255	0-100% from dark to light
118	Magic Eye Red 12	000-255	0-100%, from dark to bright
119	Magic Eye Green 12	000-255	0-100% from dark to light
120	Magic Eye Blue 12	000-255	0-100% from dark to light
121	Magic Eye Red 13	000-255	0-100% from dark to light
122	Magic Eye Green 13	000-255	0-100% from dark to light
123	Magic Eye Blue 13	000-255	0-100% from dark to light

Stroboscopic:

Stroboscopic	000-019	Off
	020-024	on
	025-064	Normal Stroboscopic, from fast to slow
	065-069	on
	070-084	Fast stroboscopic, from fast to slow
	085-089	

	090-104	on
	105-109	lightning Stroboscopic, from fast to
	110-124	slow
	125-129	on tapering
	130-144	fast on stroboscopic, from fast to
	145-149	slow on tapering
	150-164	fast off
	165-169	stroboscopic, from fast to slow
	170-184	on random normal stroboscopic, from
	185-189	fast to slow on random
	190-204	tapering
	205-209	fast
	210-224	on stroboscopic, from fast to slow on
	225-229	random tapering
	230-244	fast off stroboscopic, from
	245-255	fast to slow on tapering
		tapering
		stroboscopic, from fast to slow on
		random tapering
		tapering Tapering
		stroboscopic, from fast to slow on
		tapering
		tapering stroboscopic

LED Macro Features:	000-015	No effect
LED macro function	016-017	Static graphic 1
	018-019	Static Figure 2
	020-021	Static Figure 3
	022-023	Static Figure 4
	024-025	Static Figure 5
	026-027	Static Figure 6
	028-029	Static Figure 7
	030-031	Static Figure 8
	032-033	Static Figure 9
	034-035	Static Figure 10
	036-037	Static Figure 11
	038-039	Static Figure 12
	040-041	Static Figure 13
	042-043	Static Figure 14
	044-045	Static Figure 15
	046-047	Static Figure 16
	048-049	Static Figure 17
	050-051	Static Figure 18
	052-054	Effect 1
	055-057	Rainbow Effect 1
	058-060	Effect 2
	061-063	Rainbow Effect 2
	064-066	Effect 3
	067-069	Rainbow Effect 3
	070-072	Effect 4
	073-075	Rainbow Effect 4
	076-078	Effect 5
	079-081	Rainbow Effect 5
	082-084	Effect 6
	085-087	Rainbow Effect 6
	088-090	Effect 7
	091-093	Rainbow Effect 7
	094-096	Effect 8
	097-099	Rainbow Effect 8
	100-102	Effect 9
	103-105	Rainbow Effect 9
	106-108	Effect 10
	109-111	Rainbow Effect 10

	112-114	Effect 11
	115-117	Rainbow Effect 11
	118-120	Effect 12
	121-123	Rainbow Effect 12
	124-126	Effect 13
	127-129	Rainbow Effect 13
	130-132	Effect 14
	133-135	Rainbow Effect 14
	136-138	Effect 15
	139-141	Rainbow Effect 15
	142-144	Effect 16
	145-147	Rainbow Effect 16
	148-150	Effect 17
	151-153	Rainbow Effect 17
	154-156	Effect 18
	157-159	Rainbow Effect 18
	160-162	Effect 19
	163-165	Rainbow Effect 19
	166-168	Effect 20
	169-171	Rainbow Effect 20
	172-174	Effect 21
	175-177	Rainbow Effect 21
	178-180	Effect 22
	181-183	Rainbow Effect 22
	184-186	Effect 23
	187-189	Rainbow Effect 23
	190-192	Effect 24
	193-195	Rainbow Effect 24
	196-198	Effect 25
	199-201	Rainbow Effect 25
	202-204	Effect 26
	205-207	Rainbow Effect 26
	208-210	Effect 27
	211-213	Rainbow Effect 27
	214-216	Effect 28
	217-219	Rainbow Effect 28
	220-222	Effect 29
	223-225	Rainbow Effect 29
	226-228	Effect 30
	229-231	Rainbow Effect 30
	232-234	Effect 31

	235-237	Rainbow Effect 31
	238-240	Effect 32
	241-243	Rainbow Effect 32
	244-246	Effect 33
	247-249	Rainbow Effect 33
	250-252	Effect 34
	253-255	Rainbow Effect 34

Effect 1:

Effect 1	000	No effect
	001-049	Color selection, one number for one color
	050-052	Effect 1
	053-055	Rainbow Effect 1
	056-058	Effect 2
	059-061	Rainbow Effect 2
	062-064	Effect 3
	065-067	Rainbow Effect 3
	068-070	Effect 4
	071-073	Rainbow Effect 4
	074-076	Effect 5
	077-079	Rainbow Effect 5
	080-082	Effect 6
	083-085	Rainbow Effect 6
	086-088	Effect 7
	089-091	Rainbow Effect 7
	092-094	Effect 8
	095-097	Rainbow Effect 8
	098-100	Effect 9
	101-103	Rainbow Effect 9
	104-106	Effect 10
	107-109	Rainbow Effect 10
	110-112	Effect 11
	113-115	Rainbow Effect 11
	116-118	Effect 12
	119-121	Rainbow Effect 12
	122-124	Effect 13
	125-127	Rainbow Effect 13
	128-130	

	131-133	Effect 14
	134-136	Rainbow Effect 14
	137-139	Effect 15
	140-142	Rainbow Effect 15
	143-145	Effect 16
	146-148	Rainbow Effect 16
	149-151	Effect 17
	152-154	Rainbow Effect 17
	155-157	Effect 18
	158-160	Rainbow Effect 18
	161-163	Effect 19
	164-166	Rainbow Effect 19
	167-169	Effect 20
	170-172	Rainbow Effect 20
	173-175	Effect 21
	176-178	Rainbow Effect 21
	179-181	Effect 22
	182-184	Rainbow Effect 22
	185-187	Effect 23
	188-190	Rainbow Effect 23
	191-193	Effect 24
	194-196	Rainbow Effect 24
	197-199	Effect 25
	200-202	Rainbow Effect 25
	203-205	Effect 26
	206-208	Rainbow Effect 26
	209-211	Effect 27
	212-214	Rainbow Effect 27
	215-217	Effect 28
	218-220	Rainbow Effect 28
	221-223	Effect 29
	224-226	Rainbow Effect 29
	227-229	Effect 30
	230-232	Rainbow Effect 30
	233-235	Effect 31
	236-238	Rainbow Effect 31
	239-241	Effect 32
	242-244	Rainbow Effect 32
	245-247	Effect 33
	248-250	Rainbow Effect 33
	251-253	Rainbow circle

	254-255	Color gradient Color jump

Effect 2:

Effect 2	0	No effect
	001-001	Effect 1
	002-003	Rainbow Effect 1
	004-005	Effect 2
	006-007	Rainbow Effect 2
	008-009	Effect 3
	010-011	Rainbow Effect 3
	012-013	Effect 4
	014-015	Rainbow Effect 4
	016-017	Effect 5
	018-019	Rainbow Effect 5
	020-021	Effect 6
	022-023	Rainbow Effect 6
	024-025	Effect 7
	026-027	Rainbow Effect 7
	028-029	Effect 8
	030-031	Rainbow Effect 8
	032-033	Effect 9
	034-035	Rainbow Effect 9
	036-037	Effect 10
	038-039	Rainbow Effect 10
	040-041	Effect 11
	042-043	Rainbow Effect 11
	044-045	Effect 12
	046-047	Rainbow Effect 12
	048-049	Effect 13
	050-051	Rainbow Effect 13
	052-053	Effect 14
	054-055	Rainbow Effect 14
	056-057	Effect 15
	058-059	Rainbow Effect 15
	060-061	Effect 16
	062-063	Rainbow Effect 16
	064-065	Effect 17
	066-067	Rainbow Effect 17
	068-069	Effect 18

	070-071	Rainbow Effect 18
	072-073	Effect 19
	074-075	Rainbow Effect 19
	076-077	Effect 20
	078-079	Rainbow Effect 20
	080-081	Effect 21
	082-083	Rainbow Effect 21
	084-085	Effect 22
	086-087	Rainbow Effect 22
	088-089	Effect 23
	090-091	Rainbow Effect 23
	092-093	Effect 24
	094-095	Rainbow Effect 24
	096-097	Effect 25
	098-099	Rainbow Effect 25
	100-101	Effect 26
	102-103	Rainbow Effect 26
	104-105	Effect 27
	106-107	Rainbow Effect 27
	108-109	Effect 28
	110-111	Rainbow Effect 28
	112-113	Effect 29
	114-115	Rainbow Effect 29
	116-117	Effect 30
	118-119	Rainbow Effect 30
	120-121	Effect 31
	122-123	Rainbow Effect 31
	124-125	Effect 32
	126-127	Rainbow Effect 32
	128-129	Effect 33
	130-131	Rainbow Effect 33
	132-133	Effect 34
	134-135	Rainbow Effect 34
	136-137	Effect 35
	138-139	Rainbow Effect 35
	140-141	Effect 36
	142-143	Rainbow Effect 36
	144-145	Effect 37
	146-147	Rainbow Effect 37
	148-149	Effect 38
	150-151	Rainbow Effect 38

	152-153	Effect 39
	154-155	Rainbow Effect 39
	156-157	Effect 40
	158-159	Rainbow Effect 40
	160-161	Effect 41
	162-163	Rainbow Effect 41
	164-165	Effect 42
	166-167	Rainbow Effect 42
	168-169	Effect 43
	170-171	Rainbow Effect 43
	172-173	Effect 44
	174-175	Rainbow Effect 44
	176-177	Effect 45
	178-179	Rainbow effect 45
	180-181	Effect 46
	182-183	Rainbow Effect 46
	184-185	Effect 47
	186-187	Rainbow Effect 47
	188-189	Effect 48
	190-191	Rainbow Effect 48
	192-193	Effect 49
	194-195	Rainbow Effect 49
	196-197	Effect 50
	198-199	Rainbow Effect 50
	200-201	Effect 51
	202-203	Rainbow Effect 51
	204-205	Effect 52
	206-207	Rainbow Effect 52
	208-209	Effect 53
	210-211	Rainbow Effect 53
	212-213	Effect 54
	214-215	Rainbow Effect 54
	216-217	Effect 55
	218-219	Rainbow Effect 55
	220-221	Effect 56
	222-223	Rainbow Effect 56
	224-225	Effect 57
	226-227	Rainbow Effect 57
	228-231	Colorful horse racing 1
	232-235	Colour Runners 2
	236-239	Color Marathon 3

	240-243	Color Marathon 4
	244-247	Color Marathon 5
	248-251	Colour Marathon 6
	252-255	Colorful Marathon 7

Color macro

Color macros	000	no
	001-002	2700k
	003-004	3200k
	005-006	4200k
	007-008	5600k
	009-010	8000k
	011	blue
	012-048	Blue to cyan
	049	Cyan
	050-086	Cyan to green
	087	green
	088-124	Green to yellow
	125	yellow
	126-162	Yellow to red
	163	red
	164-200	Red to magenta
	201	Magenta Red
	202-238	to blue
	239	blue
	240-247	Color gradient, from fast to slow
	248-255	Color jumps, from fast to slow

Control Settings:

Controls	000-009	no
	010-019	XY motor reset
	020-029	Head motor reset
	030-039	Reset all motors

	040-049	Keep
	050-059	X opens backwards
	060-069	X reverse close
	070-079	Y opens in reverse
	080-089	Y reverse close
	090-099	Retain
	100-109	Dimming speed 1
	110-119	Dimming speed 2
	120-129	Dimming speed 3
	130-139	Dimming speed 4
	140-149	Keep
	150-159	Linear
	160-169	Square
	170-179	Antisquare
	180-189	S-curve
	190-255	Retain

4. Error message

4.1. The Pan and Titl reset errors

- Check whether the position where the magnets are installed on the XY axes has fallen off or been damaged.
- Check whether there are any other interfering items within the operating range of the XY
- axes.
- Check whether the XY-axis Hall elements are damaged;
- Check whether the leads connecting the XY-axis Hall elements and the PCB board have poor contact or are disconnected.
- Check whether the XY-axis motors are damaged;
- Check whether the relevant circuits of the XY-axis motor drive board are damaged.

4.2. The X-axis and Titl encoders are incorrect

- Check if the encoder is damaged;
- Check for poor contact or breaks between the encoder and the PCB board leads;

4.3. Amplify reset errors

- Check if the position of the focusing installation magnet is loose or damaged;
- Check for any other interfering objects within the range of focus operation;
- Check if the leads connecting the focusing Hall element to the PCB board have poor contact or are broken;
- Check if the focusing motor is damaged;
- Check if the related circuits of the focusing motor driver board are damaged;

4.4. Rotation reset error

- Check if the position of the focusing installation magnet is loose or damaged;
- Check if there are any other interfering items within the focusing operation range.
- Check if the leads connecting the focusing Hall element to the PCB board have poor contact or are broken;
- Check if the focusing motor is damaged;
- Check if the related circuits of the focusing motor driver board are damaged;

4.5. Temperature error

- Check if the temperature detection board is functioning properly;
- Check if the components of the temperature detection board are damaged;
- Check if the temperature detection board leads are installed properly or disconnected;

5. Common Faults

Corresponding solutions are proposed for some common faults. Any unsolvable problem should be dealt with by a professional. Before maintaining the lamp, disconnect the power supply first.

5.1. The lamp beads don't light up, the lamp doesn't work, the fan doesn't rotate

- Check if a voltage that matches the lamp is installed;
- Check for poor contact at the power supply connection or control switch for the lighting fixtures;
- Check if the power supply is insufficient;
- Check if the DMX512 controller has sent instructions.

5.2. The lamp does not accept control from the console after a normal reset

- Check whether the digital start address value and function options of the lamp are correct;
- Check if the connection of the communication control line is correct, if the communication line is too long or has been interrupted;
- Check if the control equipment has failed, check if the signal amplifiers connected in series have failed;
- Check if the communication lines are too long or if there are other devices interfering with each other;
- Optimize wiring, shorten the length of control signal lines, and lay out high-voltage and low-voltage lines separately;
- Add signal amplifiers;
- Signal lines use high-quality shielded twisted pairs;
- Connect the signal terminal resistor (120 ohms) at the end of the lamp.

5.3. The lamp does not start

- Check if the power supply parameters match the lamp;

- Check if the lamps have poor contact due to compression deformation, internal part vibration, moisture, etc. during long-distance transportation Or fall off.
- Please check if the internal wire connectors of the luminaire are loose or detached.
- Check the electronic components of the lamp (such as the electronic transformer, PCB board, motor control board, etc.) for looseness, short circuit and burnout.

5.4. When in operation, the Pan or Titl movement of the lamp is abnormal

- Check each one as in the previous step;
- Check whether the drive belts corresponding to the X and Titl inside the lamp have fallen off or broken.
- Check if the data feedback receiver (Hall) corresponding to the X and Y directions inside the lamp is damaged;
- Restart and reset once.

5.5. Some channel is out of control

- Poor contact or damage to the motor wire
- The stepper motor may be damaged
- The motor's drive circuit may be damaged

6. Equipment cleaning

To maintain the best performance of the lamps and ensure the best lighting effect, it is absolutely necessary to keep the lamps clean. Lamps must be cleaned regularly to avoid Dust, dirt, smoke residue, etc. accumulate on the surface or inside the lamp, and the frequency of cleaning depends on the application environment. If due to installation and construction

If the environment causes dust to enter the luminaire, clean it immediately to avoid damage to the optical parts of the luminaire due to excessive dust.

- It is recommended to use a soft lint-free cloth and high-quality glass cleaner. Solvents should never be used under any circumstances.
- Carefully wipe dry pieces to avoid any residue of cleaning solution
- Wipe the outside of the lens at least once every 20 days, depending on the environment in which it is used

7. CONTACT:

Please check who is our dealer in your country at our website

www.kudux.com

or write direct to us by email: office@kudux.com